ATLAS
ARCHITECTURAL METALS INC.

450/600FST Series







atlasarchmetals.com

ATLAS
ARCHITECTURAL METALS INC.

Atlas 450FST Series
Storefront Systems

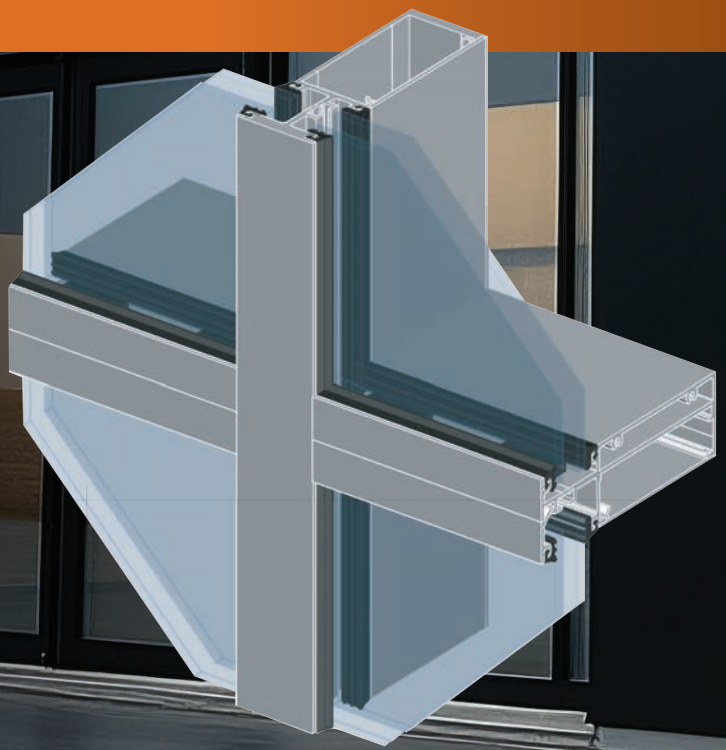

Atlas 450FST Series

Storefront Systems

Single-Cavity-Pour and debridge thermal barrier

Glass or panels can be positioned to the outboard (O) side of the 4-1/2" depth frame to achieve the look you require. Typical glass thickness is 1", and can be installed from the outside of the building. Special glazing pocket reducers allow the use of 1/4" infill thicknesses.

Our designed 450FST Series Storefront Single-Cavity-Pour and debridge thermal barriers insulate exterior surfaces from the interior to minimize temperature transfer. This provides industry accepted performance for condensation resistance and energy performance. The system is based on #12 screw fasteners which greatly decreases rework in the field.

Using the same design, assembly, and accessories as the Atlas 450FST center glazed system allows combining outboard and center planes of glass in the same elevation with the same great performance.

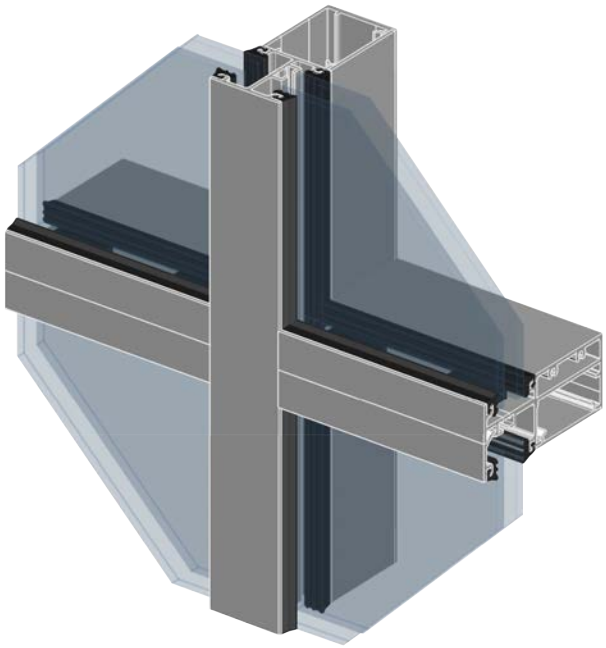

Technical Specifications

Frame Depth	4-1/2"
Glass Thickness	1" Standard (1/4" Optional)
Glazing Options	Outboard & Front Set
Construction	Screw Spline
Increased Stability	Shear Block (Optional)
Door Compatibility	N200/M300/W500 Series



M300 Medium Stile & W500 Wide Stile Entrances

Applications

- Retail Storefronts
- Office Buildings
- Mixed-use Developments
- Hospitality Environments

Also used with

7000 Series Curtainwall

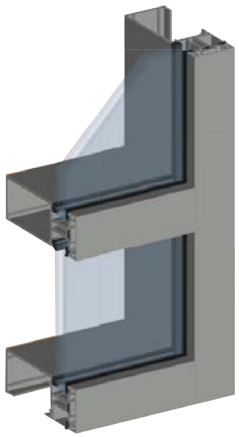

ARCHITECTURAL METALS INC.

Atlas 450FST Series

Storefront Systems

Single-Cavity-Pour and Debridge Ultra-Thermal Barrier

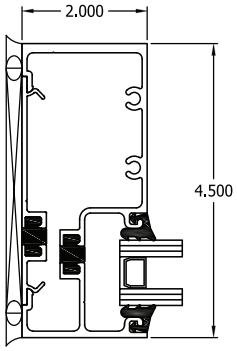

Outboard Std. Jamb

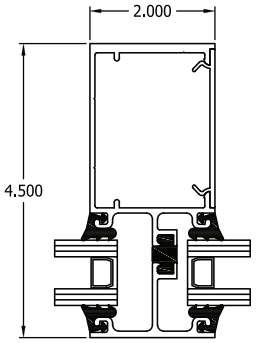

Outboard Std. Vertical

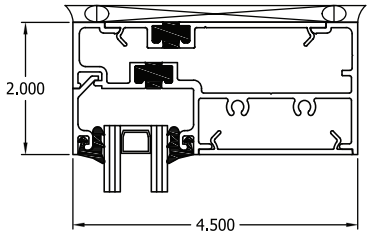

Outboard Std. Header

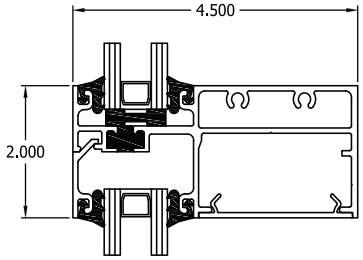

Outboard Std. Horizontal

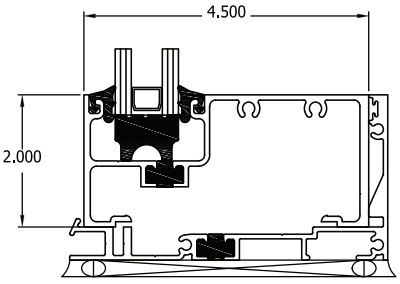

Outboard Std. Sill

System Features:

- Standard 2" (50.8mm) sight-line on verticals and horizontals
- 4-1/2" (114.3mm) system depth
- Single-Cavity-Pour and debridge thermal barrier
- EPDM roll in gaskets for 1" glass or panel thickness, standard
- #12 screw construction

Optional Features:

- Screw-spline or shear block connections
- Steel reinforcing if required
- A wide variety of standard anodized finishes are available to
- complement any project with warrantied protection, as well as street appeal.
- Option for painted finish in various colors available per request (Non-Stock)
- Outboard glass plane
- Available in non-thermal, single P&D

Atlas 450 FST Series Product Specifications

Application: Low-rise commercial buildings: retail, office, healthcare, schools and educational facilities.
Description: 2" X 4-1/2" single plane outside or inside flush glazed storefront

Face Width:	System Depth:	Glass:	Air Infiltration:	Static/ Dynamic Water Infiltration:	Structural:	U- Factor**:	Acoustic:
2"	4-1/2"	1" std (1/8" - 1-1/8")	0.06 CFM/ Ft.2 @6.24 PSF	12 PSF - Outboard Plane	30 PSF - Design 40 PSF - Overload	0.32 Thermally Broken - Outboard Plane	N/A

**U-Factor per AAMA 1503-09: COG = 0.24
Glass Makeup: 1" IGU – 1/4" SNX62/27 #2, 1/2" Argon with warm edge spacer, 1/4" clear

DISCLAIMER: Atlas takes no responsibility for product selection or application, including, but not limited to, compliance with building codes, safety codes, laws, merchantability or fitness for a particular purpose; and further disclaims all liability for the use, in whole or in part, of this Technical Guide in preparation of project. Specifications and/or other documents. Technical guides are subject to change at any time, without notice, and at Atlas sole discretion. ©2026 Atlas

ATLAS
ARCHITECTURAL METALS INC.

450FST Series

Storefront Systems

ITEM	DESCRIPTION	STOCK LENGTH	FINISH		
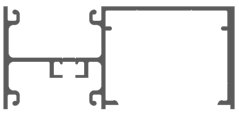 4021	FS INTERM VERT T	24’ 1”	CLEAR	BRONZE	BLACK*
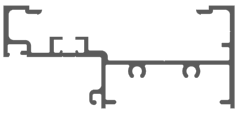 4022	FS HEAD HORZ T	24’ 1”	CLEAR	BRONZE	BLACK*
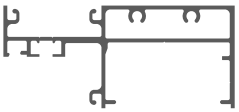 4023	FS INTERMEDIATE T	24’ 1”	CLEAR	BRONZE	BLACK*
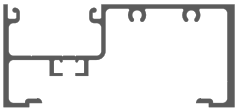 4024	FS SILL/JAMB	24’ 1”	CLEAR	BRONZE	BLACK*
 4025	FS FLAT FILLER T	24’ 1”	CLEAR	BRONZE	BLACK*
 4026	FS FACE CAP	24’ 1”	CLEAR	BRONZE	BLACK*
 4027	FS SHEAR BLOCK	12’ 0”	MILL		

*Special order.

ARCHITECTURAL METALS INC.

Atlas 450FST Series

Storefront Systems

ITEM	DESCRIPTION	STOCK LENGTH	FINISH		
 4028	FS SILL PAN T	24'1"	CLEAR	BRONZE	BLACK*
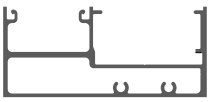 4029	FS DOOR FRAME 450 T	24' 1"	CLEAR	BRONZE	BLACK*
 4030	DOOR SASH 450 FS SERIES	24' 1"	CLEAR	BRONZE	BLACK*
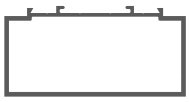 4031	FS HEADER	24' 1"	CLEAR	BRONZE	BLACK*
 4032	FS ADAPTER	24' 1"	CLEAR	BRONZE	BLACK*
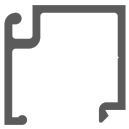 4033	FS LARGE FACE CAP	24' 1"	CLEAR	BRONZE	BLACK*
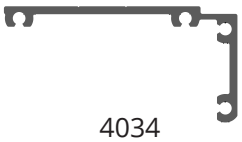 4034	FS SHEAR BLOCK	12' 0"	MILL		

*Special order.

ATLAS
ARCHITECTURAL METALS INC.

450FST Series

Storefront Systems

ITEM	DESCRIPTION	STOCK LENGTH	FINISH		
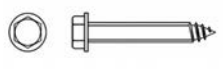 9709	9709/XBAG 14-14 X 1-1/2" HWH SMS	100 PCS			
 9710	9710/XBAG 10-16 X ¾" PAN HEAD SMS	100 PCS			
H 9822	9822/XXRX HP GASKET/SUB-SILL 250' ROLL	250'			



ARCHITECTURAL METALS INC.

Atlas 450FST Series

Storefront Systems

HEAD DETAIL

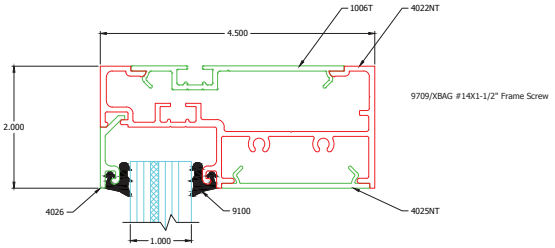

INTERMEDIATE DETAIL

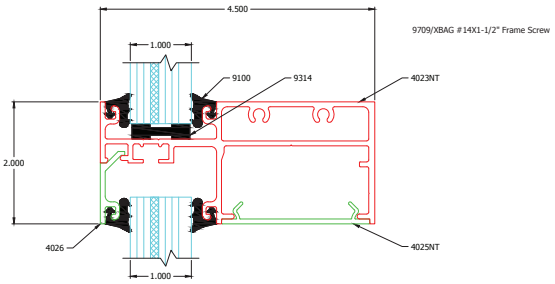

SILL DETAIL

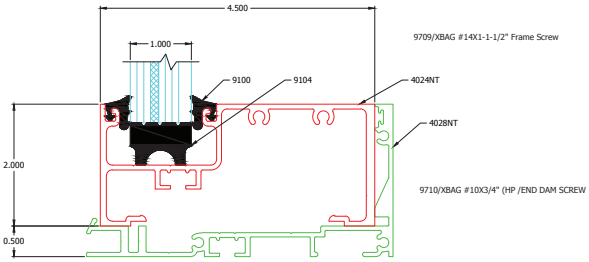

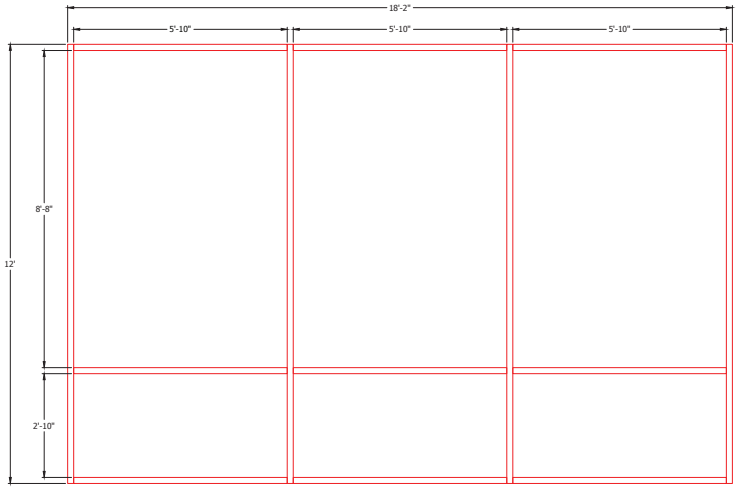

JAMB DETAIL

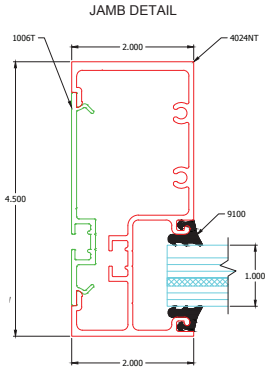

VERTICAL DETAIL

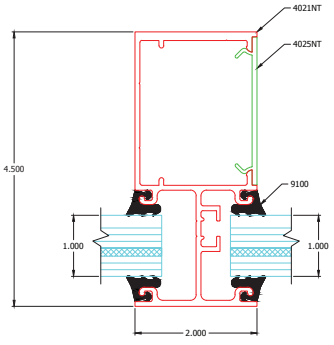

JAMB DETAIL

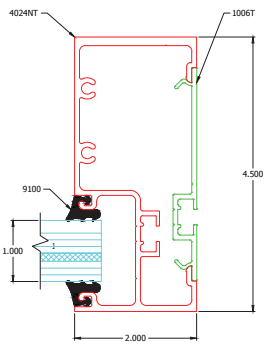

ARCHITECTURAL METALS INC.

Atlas 600FST Series
Storefront Systems

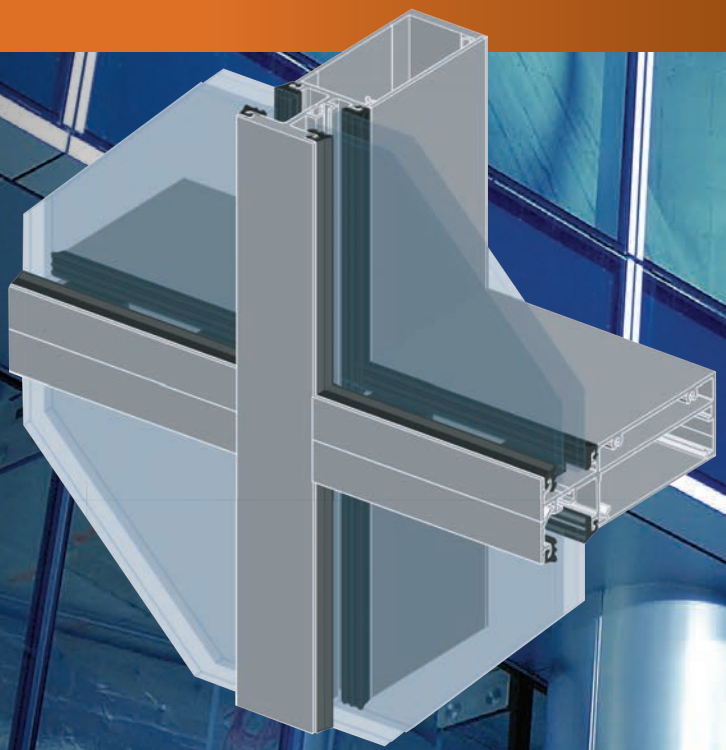

Atlas 600FST Series

Storefront Systems

Single-Cavity-Pour and debridge thermal barrier

Glass or panels can be positioned to the outboard (O) side of the 6" depth frame to achieve the look you require. Typical glass thickness is 1", and can be installed from the outside of the building. Special glazing pocket reducers allow the use of 1/4" infill thicknesses.

Our designed 600FST Series Storefront Single-Cavity-Pour and debridge thermal barriers insulate exterior surfaces from the interior to minimize temperature transfer. This provides industry accepted performance for condensation resistance and energy performance. The system is based on #12 screw fasteners which greatly decreases rework in the field.

Using the same design, assembly, and accessories as the Atlas 600FST center glazed system allows combining outboard and center planes of glass in the same elevation with the same great performance.

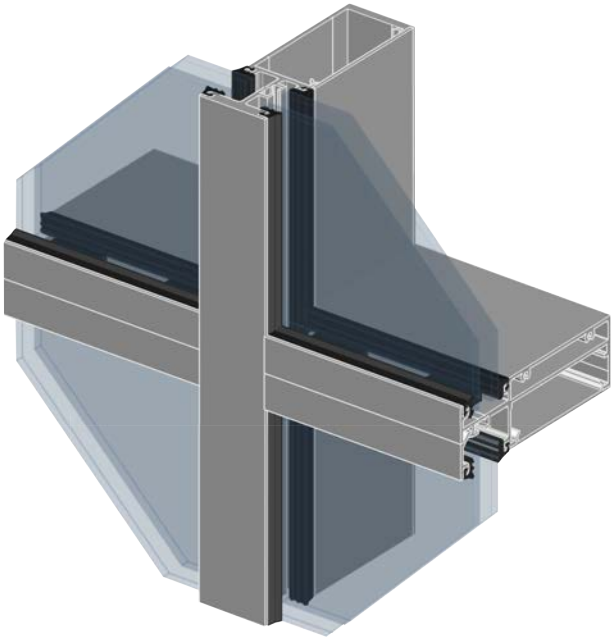

Technical Specifications

Frame Depth	6"
Glass Thickness	1" Standard (1/4" Optional)
Glazing Options	Outboard & Front Set
Construction	Screw Spline
Increased Stability	Shear Block (Optional)
Door Compatibility	N200 / M300 / W500 Series



M300 Medium Stile & W500 Wide Stile Entrances

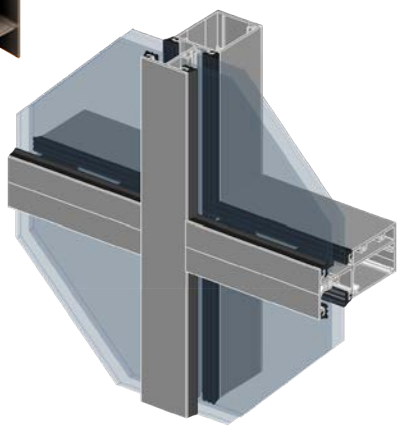

Applications

- Retail Storefronts
- Office Buildings
- Mixed-use Developments
- Hospitality Environments

Also used with

450FST Series Storefront

ARCHITECTURAL METALS INC.

600FST Series

Storefront Systems

Single-Cavity-Pour and debridge Ultra-Thermal barrier

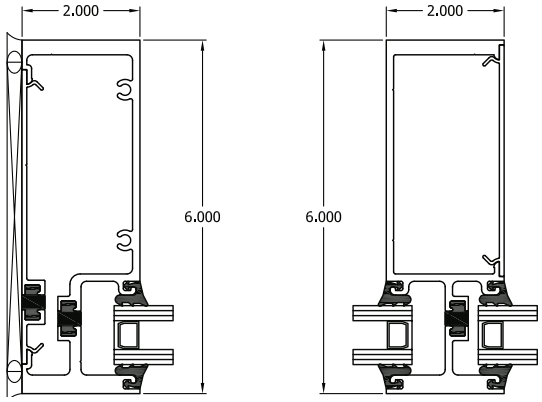

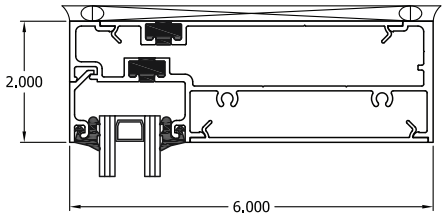

Outboard Std. Header

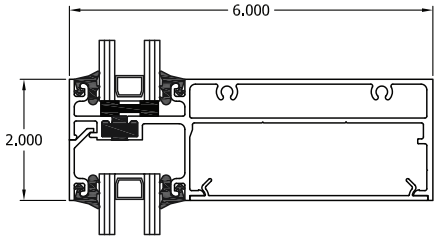

Outboard Std. Horizontal

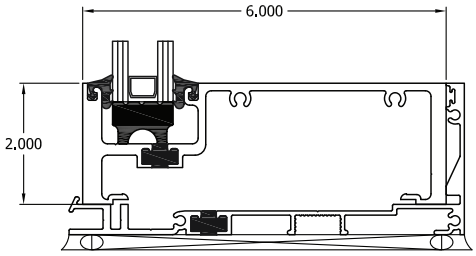

Outboard Std. Sill

System Features:

- Standard 2" (50.8mm) sight-line on verticals and horizontals
- 6" (114.3mm) system depth
- Single-Cavity-Pour and debridge thermal barrier
- EPDM roll in gaskets for 1" glass or panel thickness, standard
- #12 screw construction

Optional Features:

- Screw-spline or shear block connections
- Steel reinforcing if required
- A wide variety of standard anodized finishes are available to
- complement any project with warrantied protection, as well as street appeal.
- Option for painted finish in various colors available per request (Non-Stock)
- Outboard glass plane
- Available in non-thermal, single P&D

Atlas 600 FST Series Product Specifications

Application: Low-rise commercial buildings: retail, office, healthcare, schools and educational facilities.
Description: 2" X 6" single plane outside or inside flush glazed storefront

Face Width:	System Depth:	Glass:	Air Infiltration:	Static/ Dynamic Water	Structural:	U- Factor**:	Acoustic:
2"	6"	1" std (1/8" - 1-1/8")	0.06 CFM/ Ft.2 @6.24 PSF	12 PSF - Outboard Plane	45 PSF - Design 50 PSF - Overload	0.32 Thermally Broken - Outboard Plane	N/A

**U-Factor per AAMA 1503-09: COG = 0.24
Glass Makeup: 1" IGU – 1/4" SNX62/27 #2, 1/2" Argon with warm edge spacer, 1/4" clear

DISCLAIMER: Atlas takes no responsibility for product selection or application, including, but not limited to, compliance with building codes, safety codes, laws, merchantability or fitness for a particular purpose; and further disclaims all liability for the use, in whole or in part, of this Technical Guide in preparation of project. Specifications and/or other documents. Technical guides are subject to change at any time, without notice, and at Atlas sole discretion. ©2026 Atlas

ARCHITECTURAL METALS INC.

600FST Series

Storefront Systems

ITEM	DESCRIPTION	STOCK LENGTH	FINISH		
 8965	6" F.S GLASS SILL/JAMB	24' 1"	CLEAR	BRONZE	BLACK*
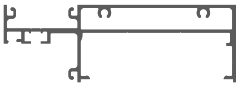 8966	6" F.S GLASS INTERMEDIATE	24' 1"	CLEAR	BRONZE	BLACK*
 8967	6" F.S GLASS HEAD	24' 1"	CLEAR	BRONZE	BLACK*
 8968	6" F.S VERTICAL MULLION GAP	24' 1"	CLEAR	BRONZE	BLACK*
 8969	6" FS FLAT FILLER LANCED	24' 1"	CLEAR	BRONZE	BLACK*
 8970	6" FS FLAT FILLER	24' 1"	CLEAR	BRONZE	BLACK*
 8971	6"F.S SILL FLASHING	24' 1"	CLEAR	BRONZE	BLACK*

*Special order.

ATLAS
ARCHITECTURAL METALS INC.

600FST Series

Storefront Systems

ITEM	DESCRIPTION	STOCK LENGTH	FINISH		
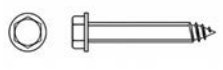 9709	9709/XBAG 14-14 X 1-1/2" HWH SMS	100 PCS			
 9710	9710/XBAG 10-16 X ¾" PAN HEAD SMS	100 PCS			
H 9822	9822/XXRX HP GASKET/SUB-SILL 250' ROLL	250'			

ARCHITECTURAL METALS INC.

2" X 6" 600FST Series System

(1" GLAZING, THERMAL)

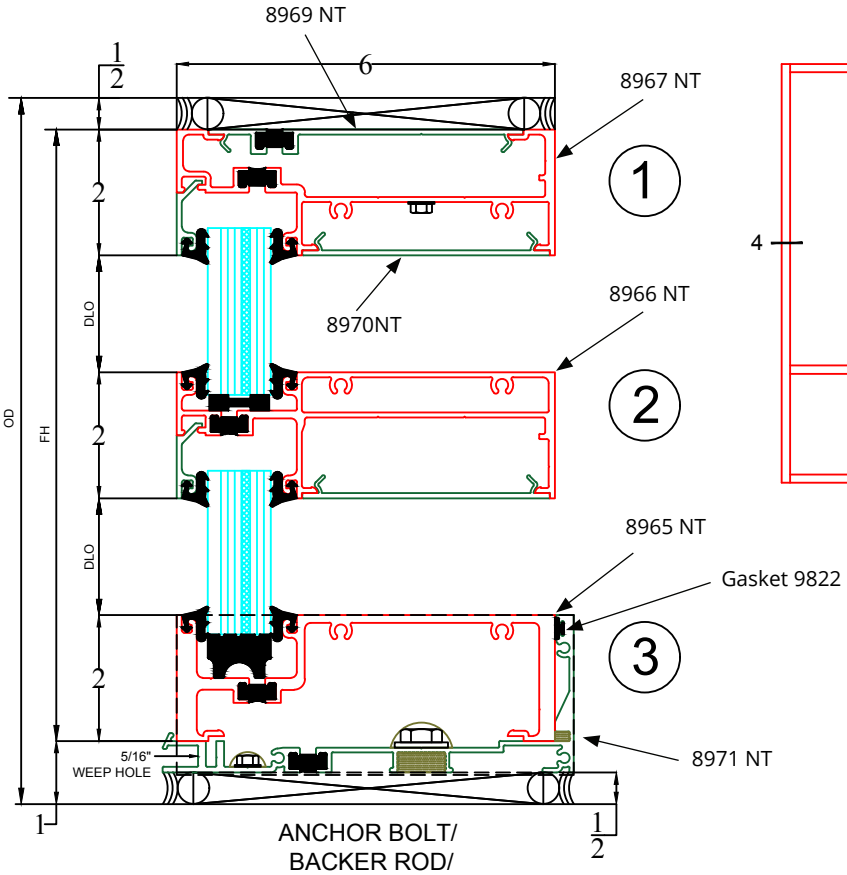

ANCHOR BOLT/
BACKER ROD/
SEALANT AND
SHIMS BY OTHERS.

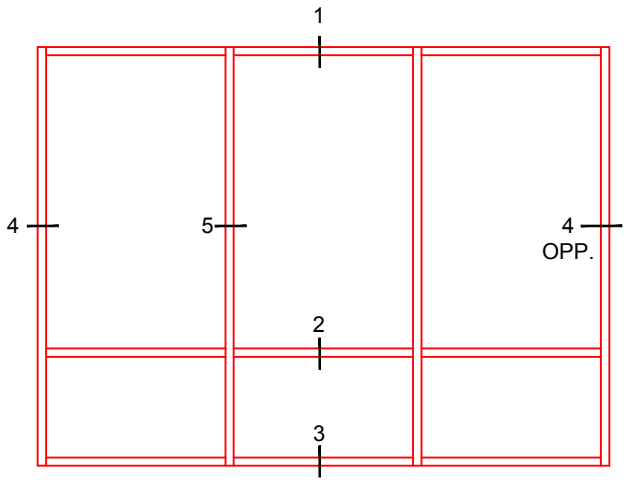

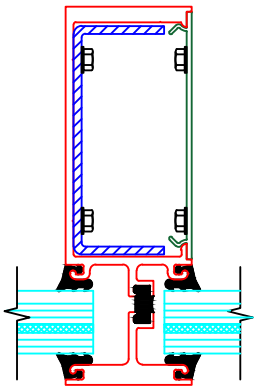

REINFORCEMENT
OPTION

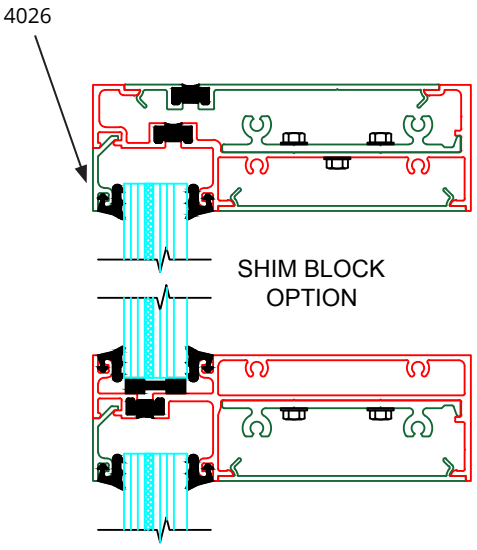

SHIM BLOCK
OPTION

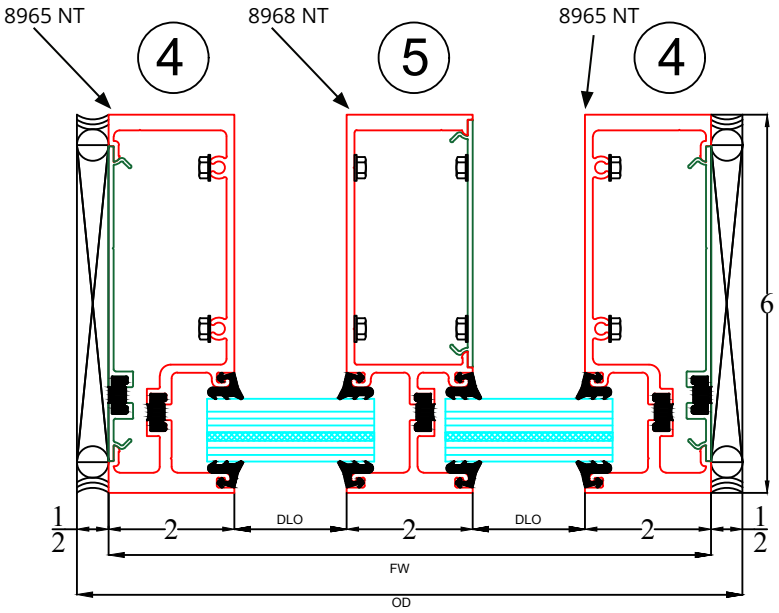

ATLAS

ARCHITECTURAL METALS INC.



ATLAS
ARCHITECTURAL METALS INC.

Atlas Architectural Metals, Inc.
(Houston HQ)
11940 Brittmoore Park Dr.
Houston, Tx 77041

Atlas Architectural Metals, Inc.
(Dallas)
2100 Luna Road Suite 140
Carrollton, Tx 75006

P: 713-869-9551
F: 713-869-4254

atlasarchmetals.com